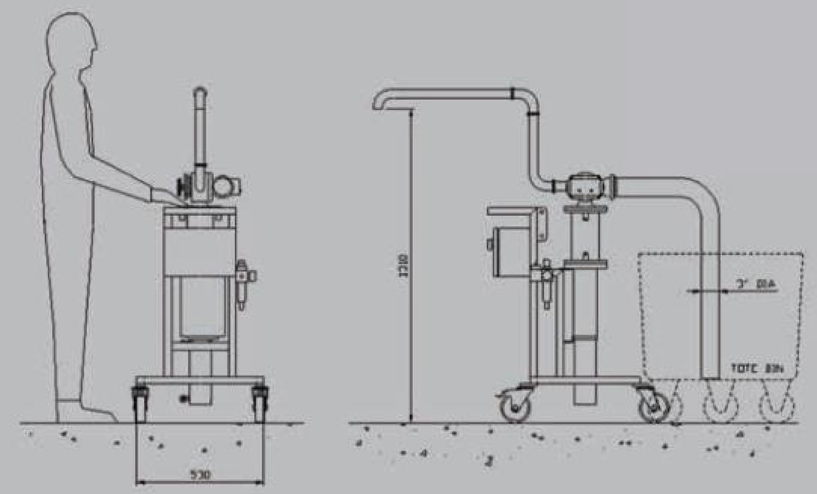

Suitable applications typically include

- Jam, Preserves & Honey
- Condiments & Sauces
- Pate, Dips & Spreads
- Coleslaw & Pasta Salads
- Sandwich & Pie Fillings
- Soup & Ready Meals
- Cakes, Puddings & Desserts
- Dairy Goods
- Seafood Products
- Non-Food Industry

Piston Pump Barrel Options

- Standard 4.0 - nominal transfer rate up to 26 litres per minute
- Maxi 5.125 - nominal bulk transfer rate up to 50 litres per minute
- Maxi 6.5 - nominal bulk transfer rate up to 80 litres per minute